S3VD-201 375 SERIES 2" TRIM DOOR FRAME HINGE JAMB @ DRYWALL

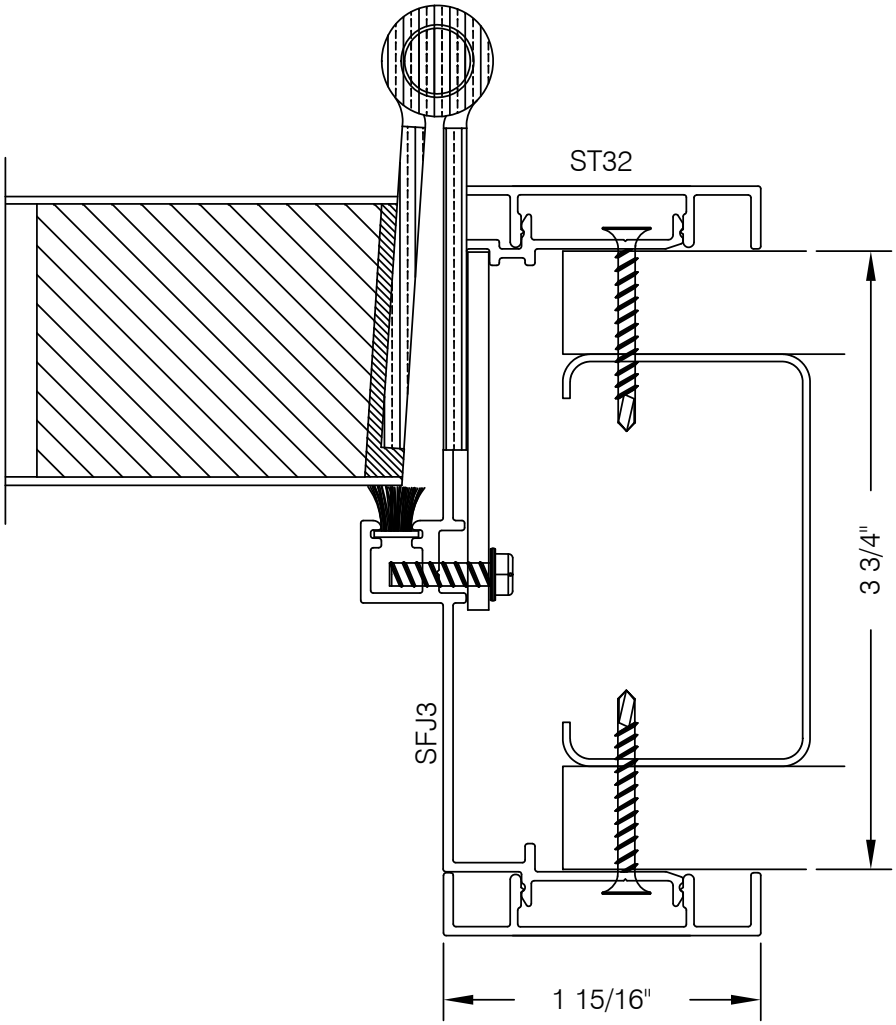

EXPLODED VIEW

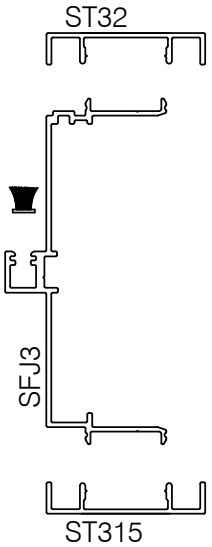

AlumaPro
Interior Frame Systems
Phone: 713 462-0861
www.alumapro.com

IMPRESSIONS
Office Front Solutions

DWG NO.	REV
S3VD-201	0
SCALE Full/Half	SHEET